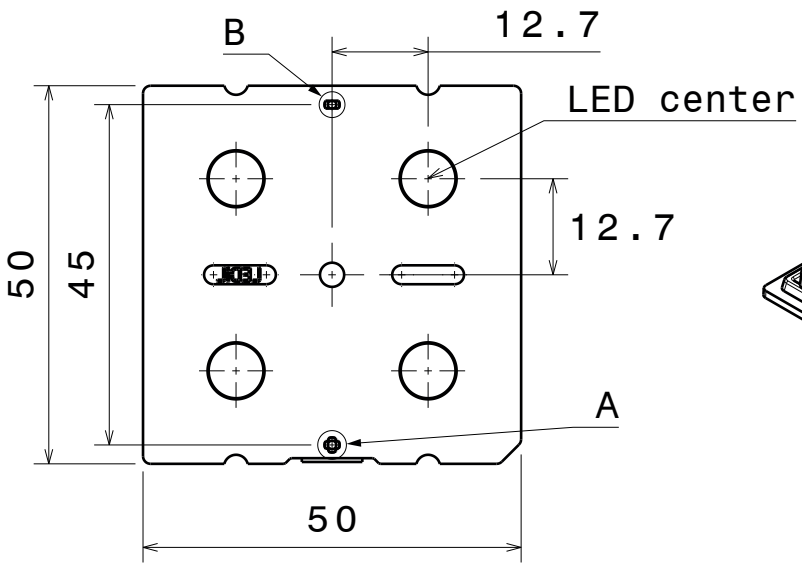

Bottom view

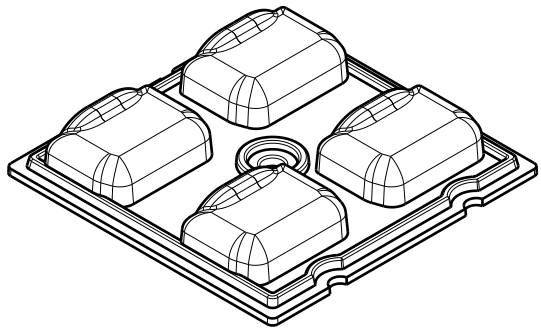

Isometric view

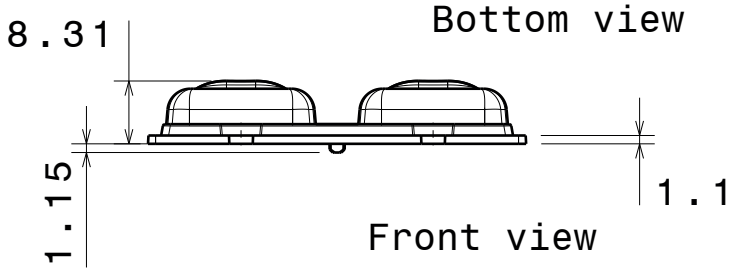

Front view

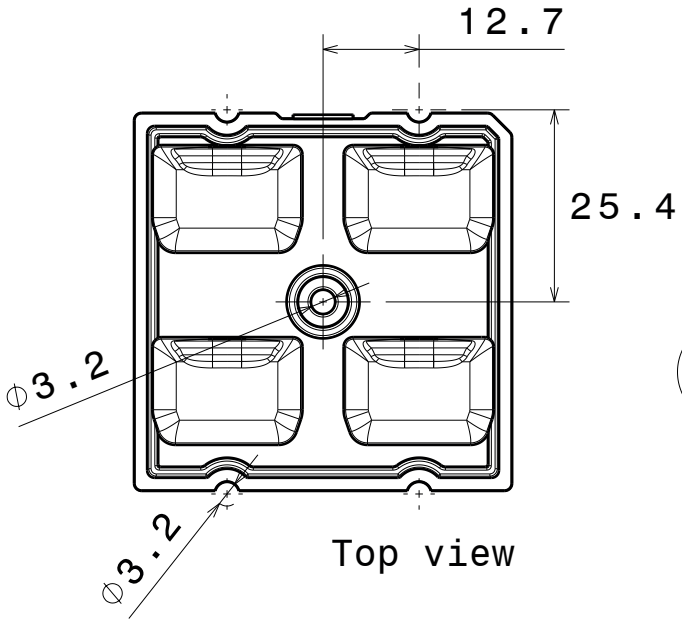

Top view

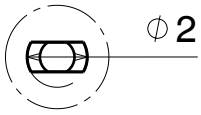

Detail B

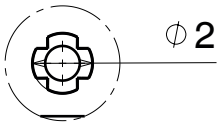

Detail A

Plastic moulding general tolerances according to DIN 16901-130 and applies if not otherwise shown in the drawing. Silicone moulding general tolerances according to ISO 3302-1 Class M3 and applies if not otherwise shown in the drawing.

Ledil Oy
Salorankatu 10
FIN 24240 SALO
Finland

THIRD ANGLE PROJECTION:

This drawing is the property of LEDiL Oy. It may not be reproduced, copied or communicated without a written agreement with LEDiL Oy.

DRAWING TITLE

STRADA-2X2-ME-WIDE1

SIZE	PART NUMBER
A4	C14164

SCALE	WEIGHT	SHEET
1:1	-	1/1